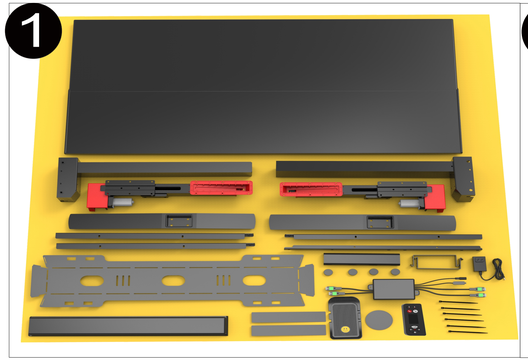
1


2

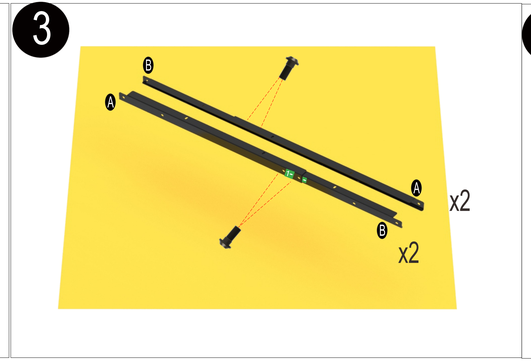
3
B
A
A
B
x2
x2

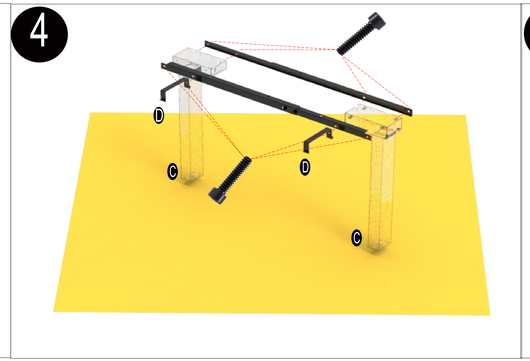
4
D
C
D
C

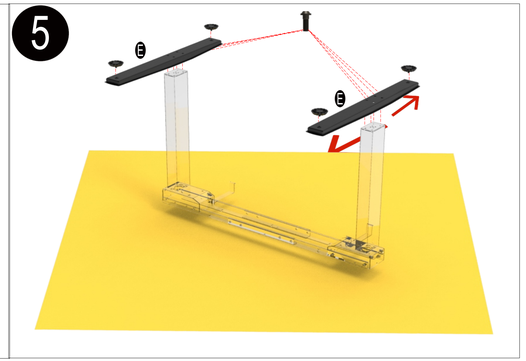
5
E
E

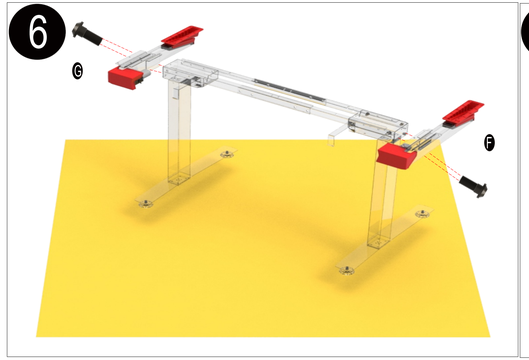
6
G
F

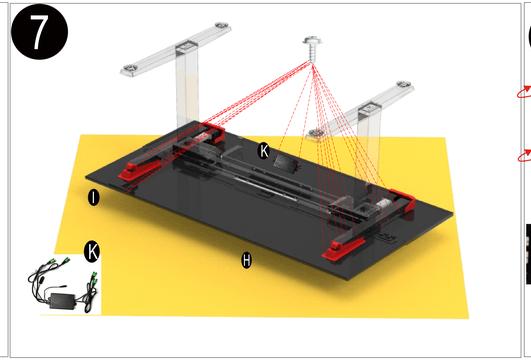
7
K
I
K
H

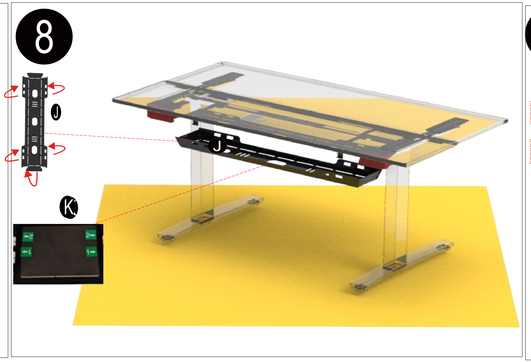
8
I
J
K

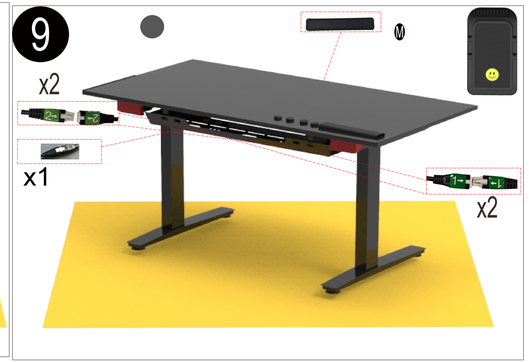
9
M
x2
x1
x2







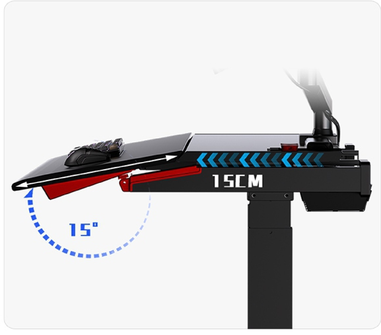
15CM
15°

